Dr. Gabi Breuel, Lucas Dahlbock / Mercedes-Benz AG
Dr. Ilja Radusch / DCAITI

12 MAY 22

FINAL EVENT

Role Based Behavior Coordination

AGENDA

Introduction and Overview

F1 Merge

F2 Platoon

Summary

Cooperative Functions in IMAGinE

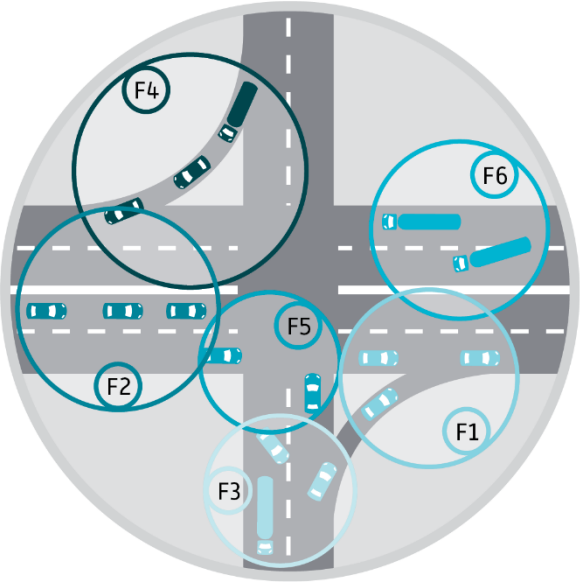

F1 Cooperative merging on highways

F2 Cooperative longitudinal control on highways

Mercedes-Benz

[ˌdiːsɪ ɑːˈtiː]

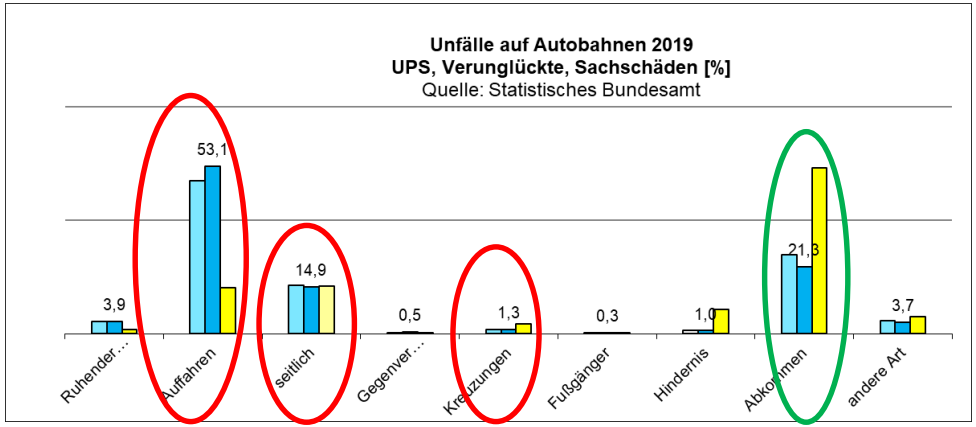

The scenarios (F1 & F2) provide a higher level of safety on highways

Cooperative On-Ramp Merging (F1)

Motivation

- In areas where lanes end or intertwine, drivers must change lanes under spatial and temporal restrictions

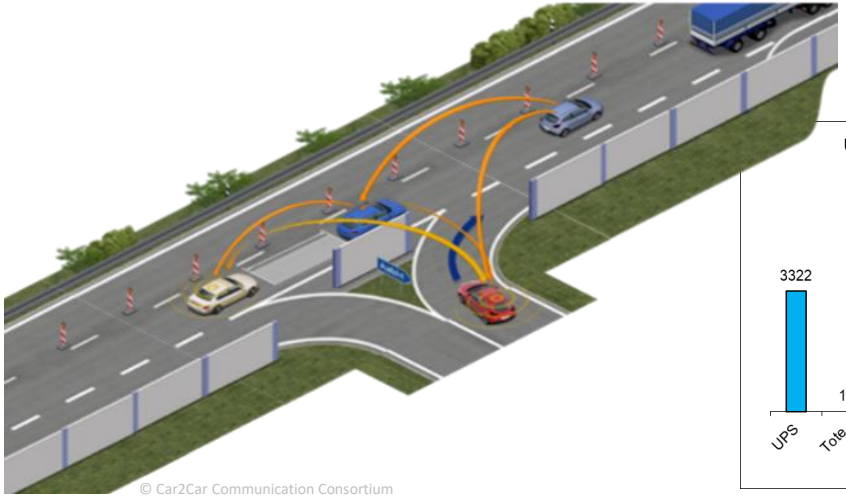

Accident directions
(merging, lane change, sideways)

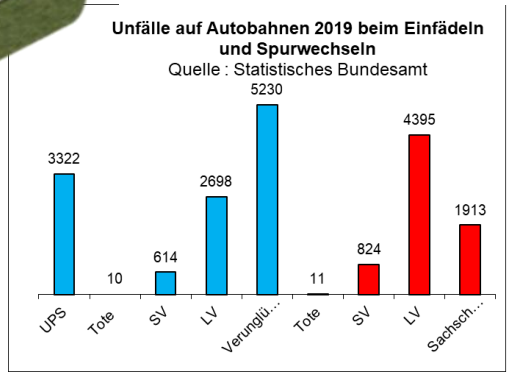

Accident type
(turning)

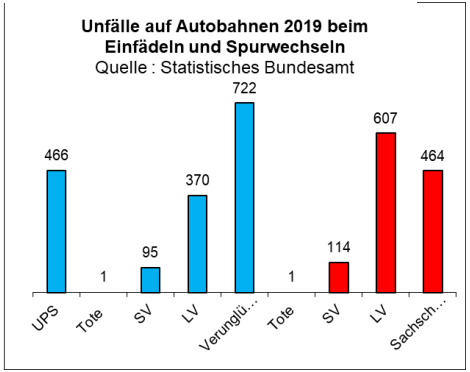

Potential and Total

SV & LV: 75% & 61%

SV & LV: 83% & 61%

Cooperative Distance Control on Freeways (F2)

Motivation

- Current longitudinal guidance systems such as Adaptive Cruise Control (ACC) use vehicle-specific sensors to record vehicles in front
- Performance of these systems is limited due to limited detection accuracy, range and latency of sensors

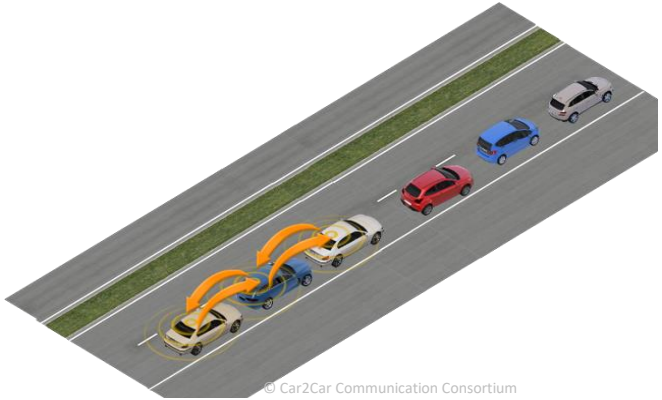

Accident direction
(lonitudinal coll.)

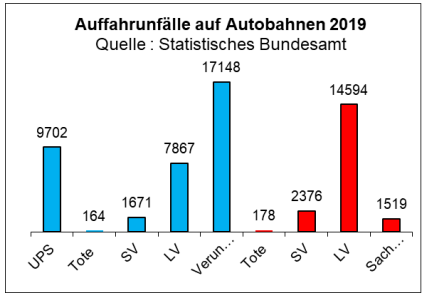

Accident type
(rear end collision)

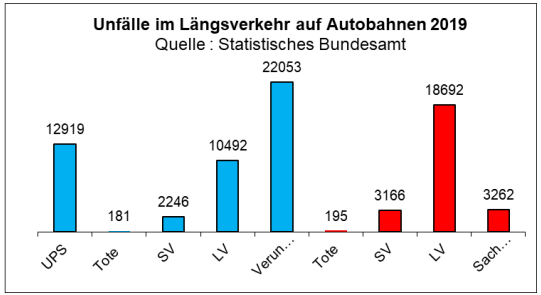

Potential and Total

SV & LV: 70% & 54%

SV & LV: 71% & 56%

Role-Based Approach

- Vehicles do not vote on the "how?", but on the "what?"
- Analogous to human cooperation, the maneuver and the roles are limited
- Therefore, the trajectories to be driven are not explicitly coordinated, but result from the intended maneuver, desired rolls, and function

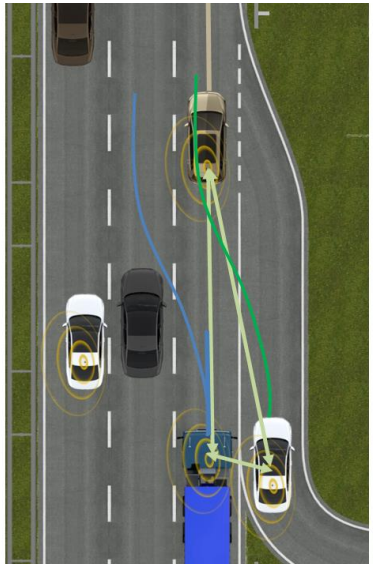

© Car2Car Communication Consortium

Session roles:
- Merge Veh.
- Front Veh.
- Rear Veh.

O. Sawade and I. Radusch, “Survey and classification of cooperative automated driver assistance systems,” in 2015 IEEE 82nd Vehicular Technology Conference, VTC Fall 2015 - Proceedings, 2016.
O Sawade, M Schulze, I. Radusch, „Robust Communication for Cooperative Driving Maneuvers“ in IEEE Intelligent Transportation Systems Magazine 10 (3), 159-169, 2018.

Communication Process Considering F1

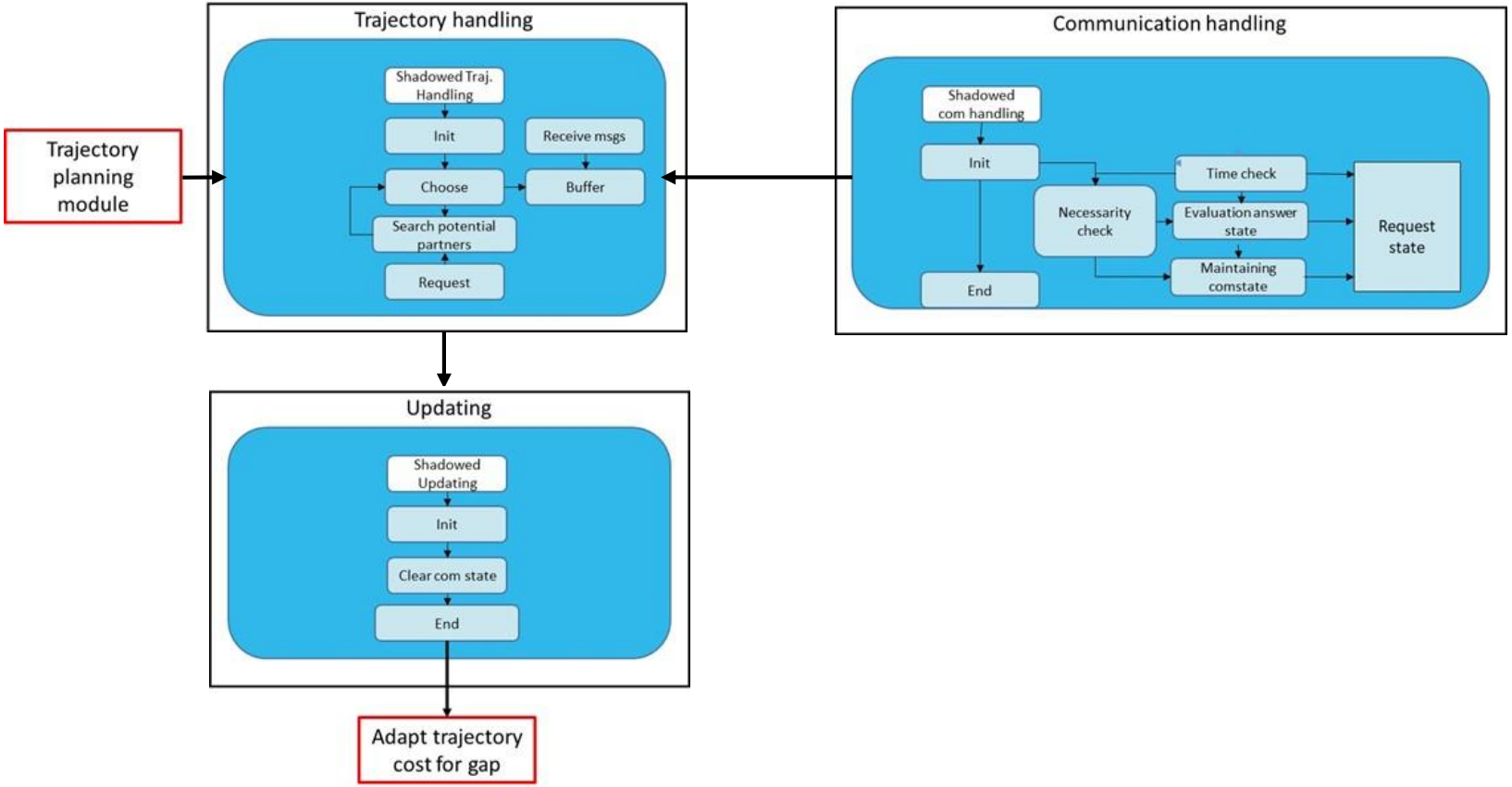

Communication Process

Master State-Machine of egovehicle cooperates/interacts with the CMP State Machines of other vehicle

1. SEARCHING: searching for participants with beacon messages
2. Coordination mechanism:
   - VOTE: voting round in which all participants agree or reject the request
   - SYNC: synchronization round to determine the negotiations
   - IN SESSION: continuous heartbeat to guarantee synchronicity

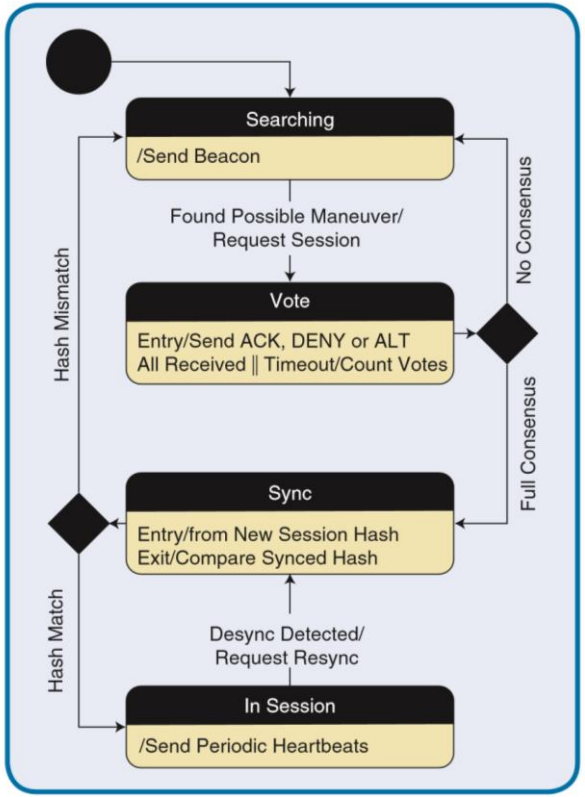

Robust Communication for Cooperative Driving Maneuvers, Oliver Sawade, Matthias Schulze, Ilja Radusch

F1 Collaborative Maneuver Protocol (CMP)

Overall Procedure

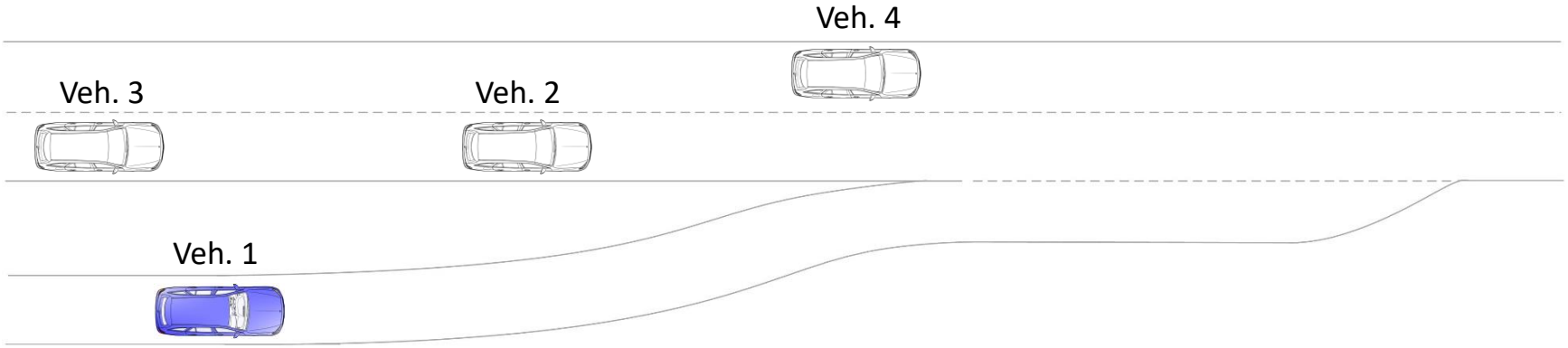

F1 Collaborative Maneuver Protocol (CMP)

Procedure

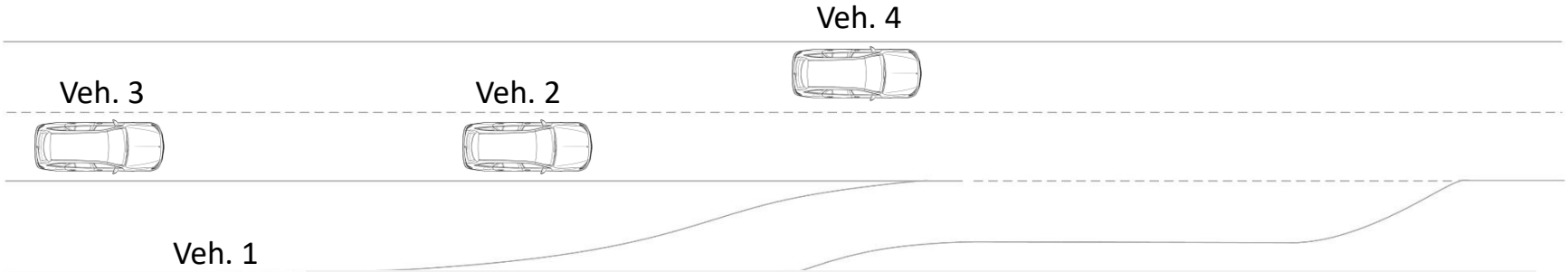

Veh. 1:	Veh. 2:	Veh. 3:	Veh. 4:

Session ID:
FunctionCode:
 	
Distributed state
{
}
 	
Desired state
{
}
	Session ID:
	FunctionCode:
	
	Distributed state
	{
	}
	
	Desired state
	{
	}
		Session ID:
		FunctionCode:
		
		Distributed state
		{
		}
		
		Desired state
		{
		}
			Session ID:
			FunctionCode:
			
			Distributed state
			{
			}
			
			Desired state
			{
			}

F1 Collaborative Maneuver Protocol (CMP)

Procedure

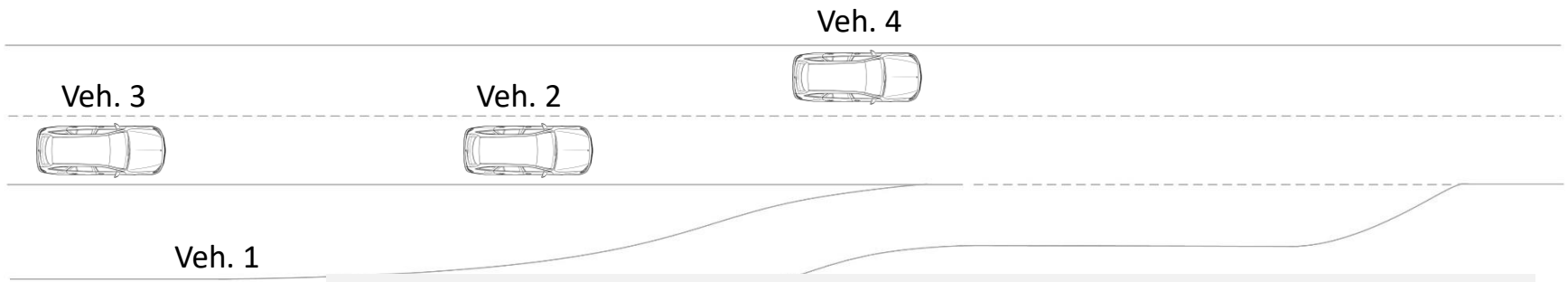

new session ID
12345

Veh. 1:

Session ID:
FunctionCode:

Distributed state
{
}

Desired state
{
Session-ID: 12345
FunctionCode: 1
State: Build
Roles:
<Veh1,lead;Veh2,front_1;Veh3,rear_1;Veh4,participant>
Change-Timeout: 1495394318
}

Veh. 2:

Session ID:
FunctionCode:

Distributed state
{
}

Desired state
{
}

Veh. 3:

Session ID:
FunctionCode:

Distributed state
{
}

Desired state
{
}

Veh. 4:

Session ID:
FunctionCode:

Distributed state
{
}

Desired state
{
}

F1 Collaborative Maneuver Protocol (CMP)

Procedure

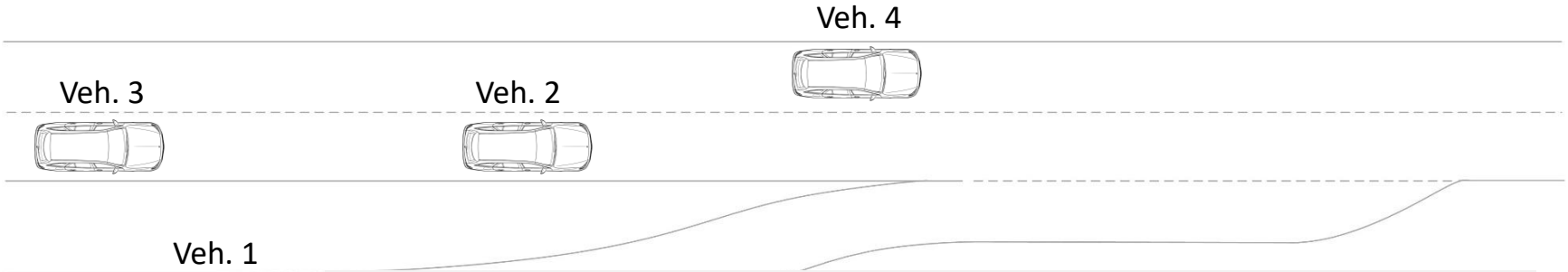

FunctionCode
1 = Merge

Veh. 1:

Session ID:
FunctionCode:

Distributed state
{
}

Desired state
{
Session-ID: 12345
FunctionCode: 1
State: Build
Roles:
<Veh1,lead;Veh2,front_1;Veh3,rear_1;Veh4,participant>
Change-Timeout: 1495394318
}

Veh. 2:

Session ID:
FunctionCode:

Distributed state
{
}

Desired state
{
}

Veh. 3:

Session ID:
FunctionCode:

Distributed state
{
}

Desired state
{
}

Veh. 4:

Session ID:
FunctionCode:

Distributed state
{
}

Desired state
{
}

F1 Collaborative Maneuver Protocol (CMP)

Procedure

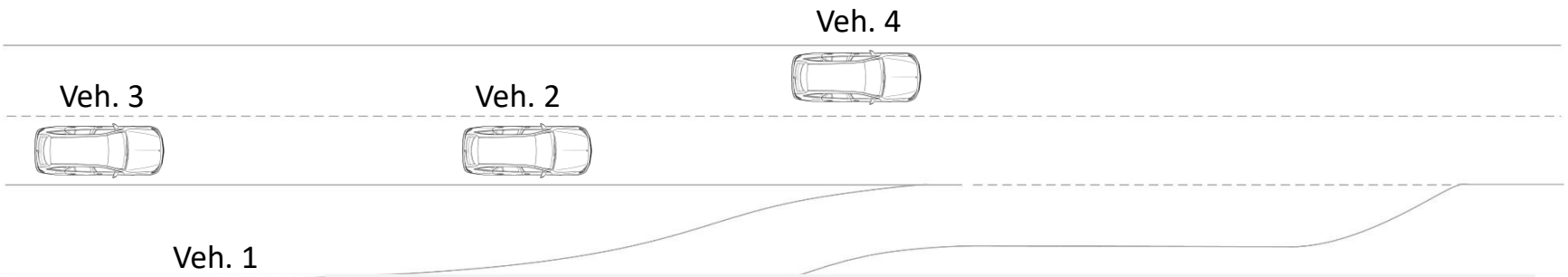

Desired state:
Build

Veh. 1:

Session ID:
FunctionCode:

Distributed state
{
}

Desired state
{
Session-ID: 12345
FunctionCode: 1
State: Build
Roles:
<Veh1,lead;Veh2,front_1;Veh3,rear_1;Veh4,participant>
Change-Timeout: 1495394318
}

Veh. 2:

Session ID:
FunctionCode:

Distributed state
{
}

Desired state
{
}

Veh. 3:

Session ID:
FunctionCode:

Distributed state
{
}

Desired state
{
}

Veh. 4:

Session ID:
FunctionCode:

Distributed state
{
}

Desired state
{
}

F1 Collaborative Maneuver Protocol (CMP)

Procedure

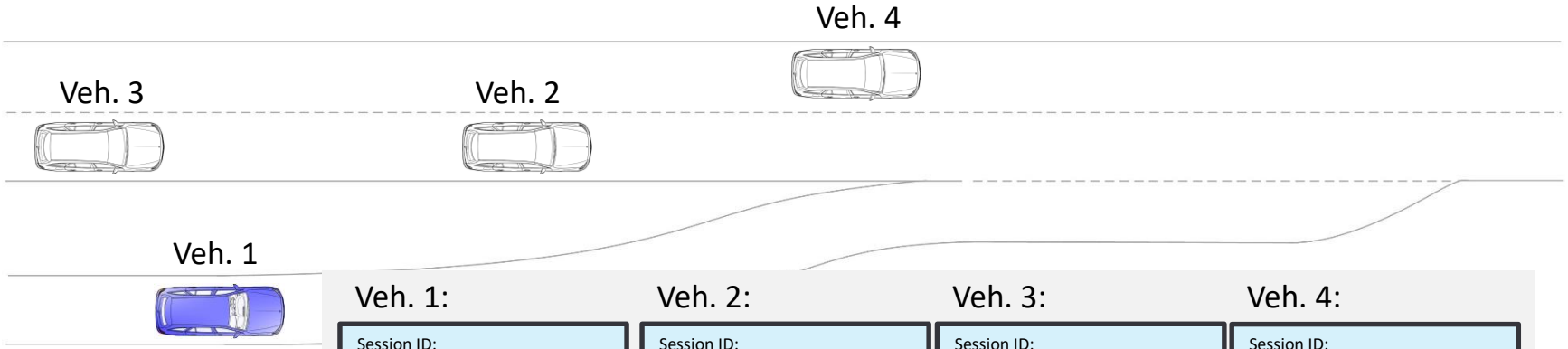

Desired Roles:
Veh 1 Rolle „lead“
Veh 2 Rolle „front_1“
Veh 3 Rolle „rear_1“
Veh 4 Rolle „participant“

Veh. 1:

Session ID:
FunctionCode:

Distributed state
{
}

Desired state
{
Session-ID: 12345
FunctionCode: 1
State: Build
Roles:
<Veh1,lead;Veh2,front_1;Veh3,rear_1;Veh4,participant>
Change-Timeout: 1495394318
}

Veh. 2:

Session ID:
FunctionCode:

Distributed state
{
}

Desired state
{
}

Veh. 3:

Session ID:
FunctionCode:

Distributed state
{
}

Desired state
{
}

Veh. 4:

Session ID:
FunctionCode:

Distributed state
{
}

Desired state
{
}

F1 Collaborative Maneuver Protocol (CMP)

Procedure

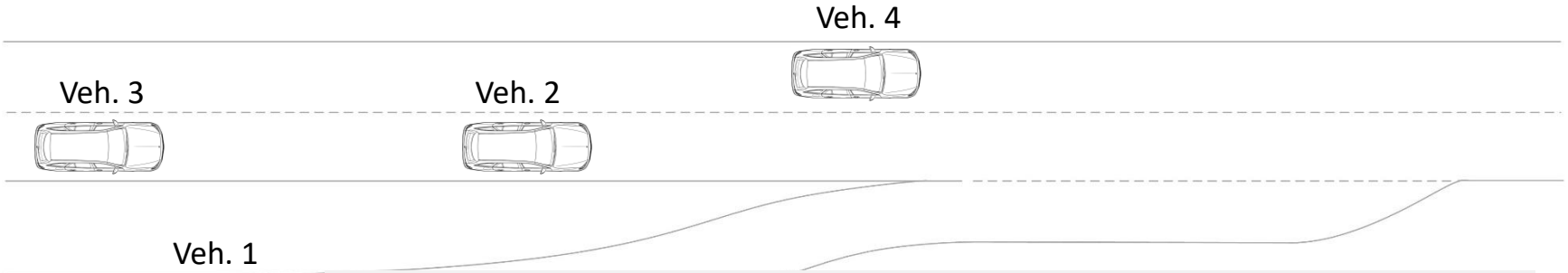

Change-Timeout
1495394318

Veh. 1:

Session ID:
FunctionCode:

Distributed state
{
}

Desired state
{
Session-ID: 12345
FunctionCode: 1
State: Build
Roles:
<Veh1,lead;Veh2,front_1;Veh3,rear_1;Veh4,participant>
Change-Timeout: 1495394318
}

Veh. 2:

Session ID:
FunctionCode:

Distributed state
{
}

Desired state
{
}

Veh. 3:

Session ID:
FunctionCode:

Distributed state
{
}

Desired state
{
}

Veh. 4:

Session ID:
FunctionCode:

Distributed state
{
}

Desired state
{
}

F1 Collaborative Maneuver Protocol (CMP)

Procedure

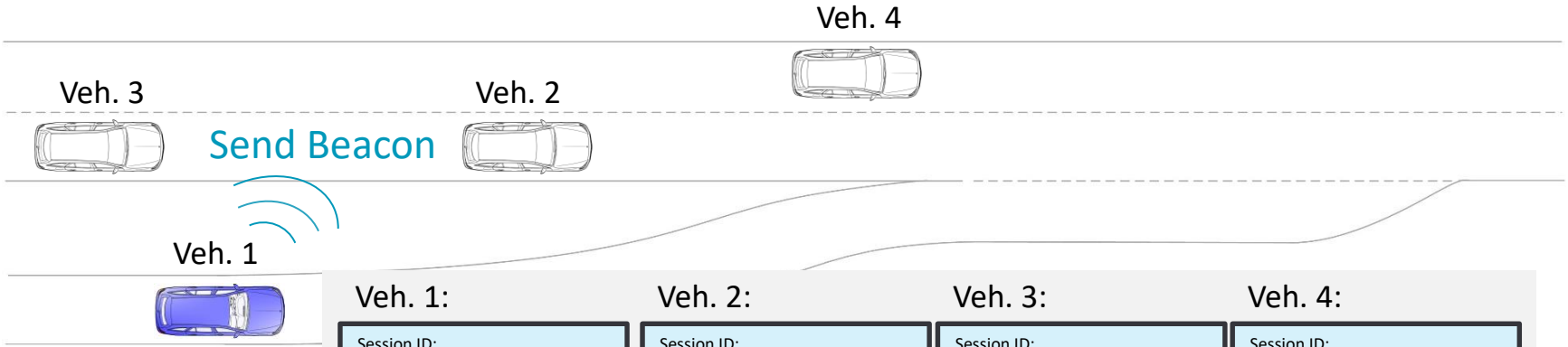

Veh. 1:

Session ID:
FunctionCode:

Distributed state
{
}

Desired state
{
Session-ID: 12345
FunctionCode: 1
State: Build
Roles:
<Veh1,lead;Veh2,front_1;Veh3,rear_1;Veh4,participant>
Change-Timeout: 1495394318
}

Veh. 2:

Session ID:
FunctionCode:

Distributed state
{
}

Desired state
{
}

Veh. 3:

Session ID:
FunctionCode:

Distributed state
{
}

Desired state
{
}

Veh. 4:

Session ID:
FunctionCode:

Distributed state
{
}

Desired state
{
}

F1 Collaborative Maneuver Protocol (CMP)

Procedure

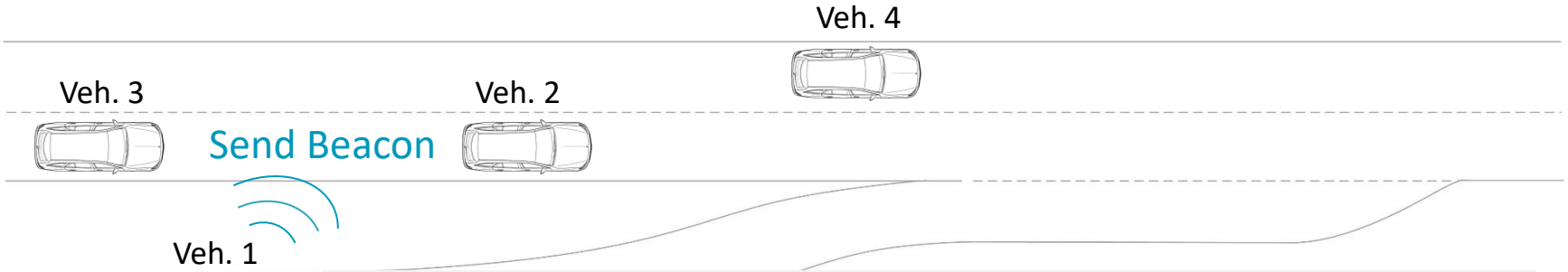

indicates consent

Veh. 1:

Session ID:
FunctionCode:

Distributed state
{
}

Desired state
{
Session-ID: 12345
FunctionCode: 1
State: Build
Roles:
<Veh1,lead;Veh2,front_1;Veh3,rear_1;Veh4,participant>
Change-Timeout: 1495394318
}

Veh. 2:

Session ID:
FunctionCode:

Distributed state
{
}

Desired state
{
Session-ID: 12345
FunctionCode: 1
State: Build
Roles:
<Veh1,lead;Veh2,front_1;Veh3,rear_1;Veh4,participant>
Change-Timeout: 1495394318
}

Veh. 3:

Session ID:
FunctionCode:

Distributed state
{
}

Desired state
{
}

Veh. 4:

Session ID:
FunctionCode:

Distributed state
{
}

Desired state
{
}

F1 Collaborative Maneuver Protocol (CMP)

Procedure

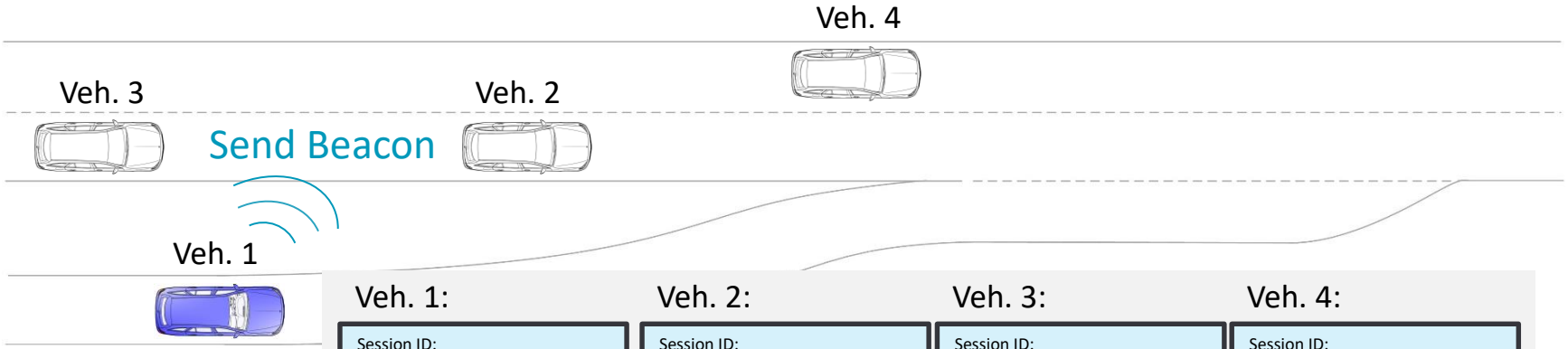

indicates consent

Veh. 1:

```
Session ID:
FunctionCode:

Distributed state
{
}

Desired state
{
    Session-ID: 12345
    FunctionCode: 1
    State: Build
    Roles:
    <Veh1,lead;Veh2,front_1;Veh
    3,rear_1;Veh4,participant>
    Change-Timeout: 1495394318
}
```

Veh. 2:

```
Session ID:
FunctionCode:

Distributed state
{
}

Desired state
{
    Session-ID: 12345
    FunctionCode: 1
    State: Build
    Roles:
    <Veh1,lead;Veh2,front_1;Veh
    3,rear_1;Veh4,participant>
    Change-Timeout: 1495394318
}
```

Veh. 3:

```
Session ID:
FunctionCode:

Distributed state
{
}

Desired state
{
    Session-ID: 12345
    FunctionCode: 1
    State: Build
    Roles:
    <Veh1,lead;Veh2,front_1;Veh
    3,rear_1;Veh4,participant>
    Change-Timeout: 1495394318
}
```

Veh. 4:

```
Session ID:
FunctionCode:

Distributed state
{
}

Desired state
{
}
```

F1 Collaborative Maneuver Protocol (CMP)

Procedure

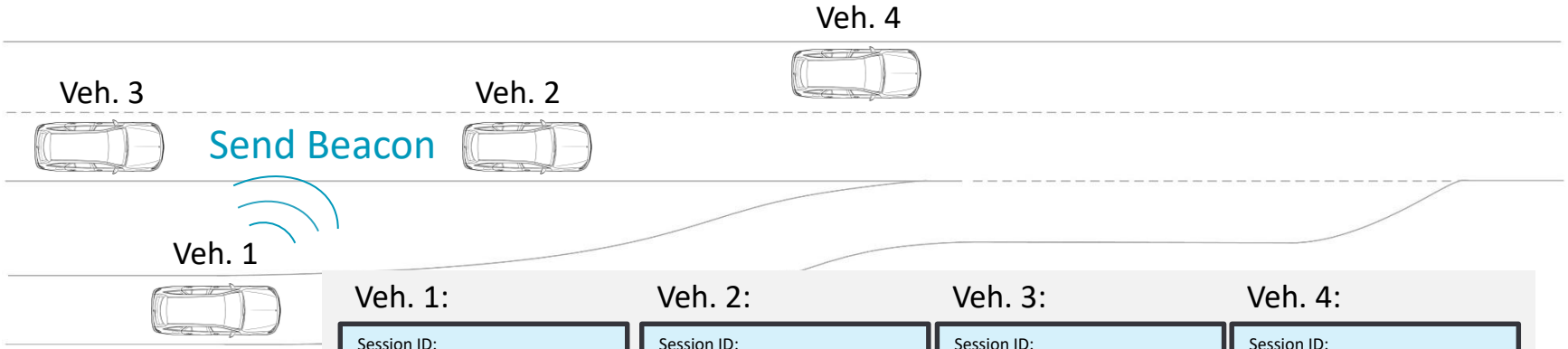

indicates consent

Veh. 1:

```
Session ID:
FunctionCode:

Distributed state
{
}

Desired state
{
    Session-ID: 12345
    FunctionCode: 1
    State: Build
    Roles:
    <Veh1,lead;Veh2,front_1;Veh
    3,rear_1;Veh4,participant>
    Change-Timeout: 1495394318
}
```

Veh. 2:

```
Session ID:
FunctionCode:

Distributed state
{
}

Desired state
{
    Session-ID: 12345
    FunctionCode: 1
    State: Build
    Roles:
    <Veh1,lead;Veh2,front_1;Veh
    3,rear_1;Veh4,participant>
    Change-Timeout: 1495394318
}
```

Veh. 3:

```
Session ID:
FunctionCode:

Distributed state
{
}

Desired state
{
    Session-ID: 12345
    FunctionCode: 1
    State: Build
    Roles:
    <Veh1,lead;Veh2,front_1;Veh
    3,rear_1;Veh4,participant>
    Change-Timeout: 1495394318
}
```

Veh. 4:

```
Session ID:
FunctionCode:

Distributed state
{
}

Desired state
{
    Session-ID: 12345
    FunctionCode: 1
    State: Build
    Roles:
    <Veh1,lead;Veh2,front_1;Veh
    3,rear_1;Veh4,participant>
    Change-Timeout: 1495394318
}
```

F1 Collaborative Maneuver Protocol (CMP)

Procedure

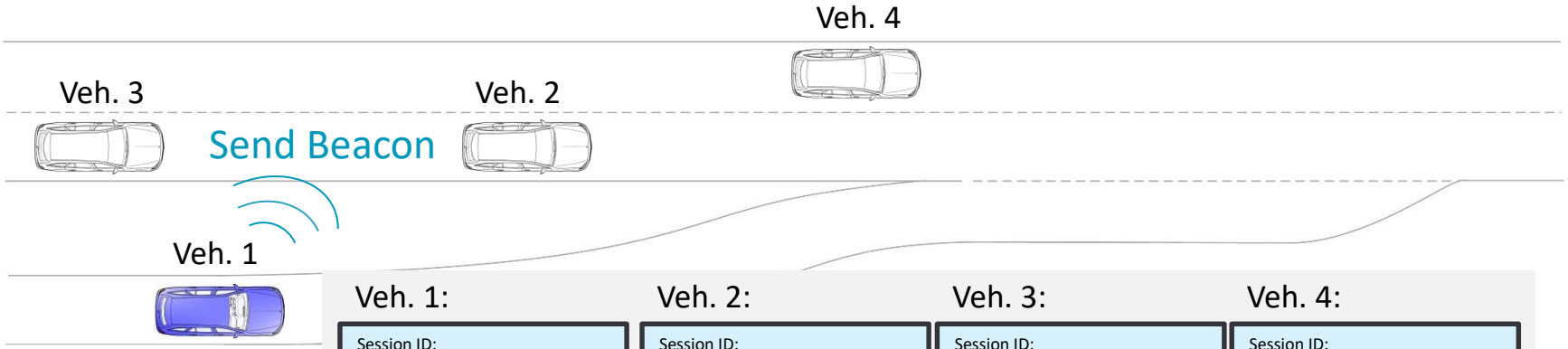

Common status change as soon as all participants have the same wish

Veh. 1:

```
Session ID:
FunctionCode:

Distributed state
{
}

Desired state
{
    Session-ID: 12345
    FunctionCode: 1
    State: Build
    Roles:
    <Veh1,lead;Veh2,front_1;Veh
    3,rear_1;Veh4,participant>
    Change-Timeout: 1495394318
}
```

Veh. 2:

```
Session ID:
FunctionCode:

Distributed state
{
}

Desired state
{
    Session-ID: 12345
    FunctionCode: 1
    State: Build
    Roles:
    <Veh1,lead;Veh2,front_1;Veh
    3,rear_1;Veh4,participant>
    Change-Timeout: 1495394318
}
```

Veh. 3:

```
Session ID:
FunctionCode:

Distributed state
{
}

Desired state
{
    Session-ID: 12345
    FunctionCode: 1
    State: Build
    Roles:
    <Veh1,lead;Veh2,front_1;Veh
    3,rear_1;Veh4,participant>
    Change-Timeout: 1495394318
}
```

Veh. 4:

```
Session ID:
FunctionCode:

Distributed state
{
}

Desired state
{
    Session-ID: 12345
    FunctionCode: 1
    State: Build
    Roles:
    <Veh1,lead;Veh2,front_1;Veh
    3,rear_1;Veh4,participant>
    Change-Timeout: 1495394318
}
```

F1 Collaborative Maneuver Protocol (CMP)

Procedure

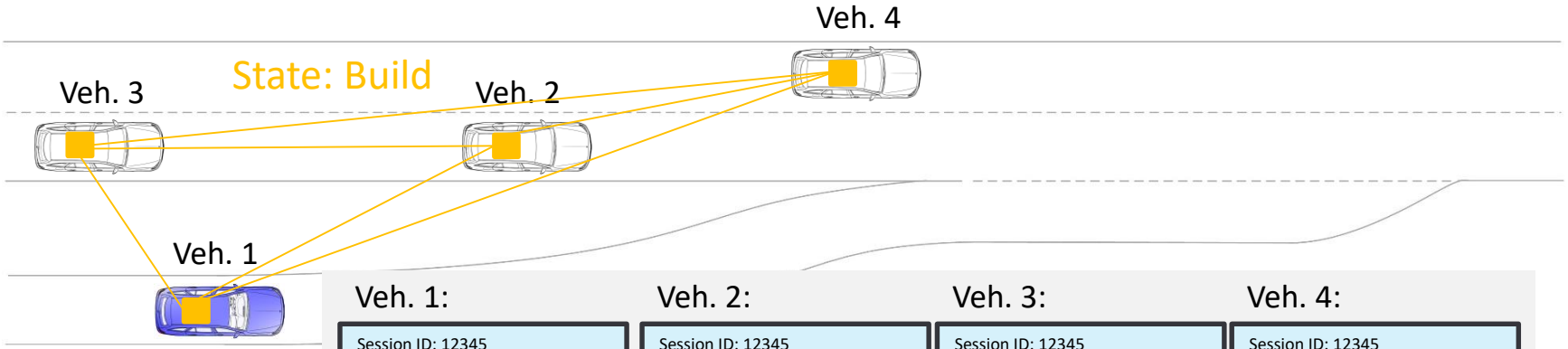

Veh. 1:

Session ID: 12345
FunctionCode: 1

Distributed state
{
State: Build
Roles:
<Veh1,lead;Veh2,front_1;Veh3,rear_1;Veh4,participant>
}

Desired state
{
}

Veh. 2:

Session ID: 12345
FunctionCode: 1

Distributed state
{
State: Build
Roles:
<Veh1,lead;Veh2,front_1;Veh3,rear_1;Veh4,participant>
}

Desired state
{
}

Veh. 3:

Session ID: 12345
FunctionCode: 1

Distributed state
{
State: Build
Roles:
<Veh1,lead;Veh2,front_1;Veh3,rear_1;Veh4,participant>
}

Desired state
{
}

Veh. 4:

Session ID: 12345
FunctionCode: 1

Distributed state
{
State: Build
Roles:
<Veh1,lead;Veh2,front_1;Veh3,rear_1;Veh4,participant>
}

Desired state
{
}

Common status change as soon as all participants have the same wish

F1 Collaborative Maneuver Protocol (CMP)

Procedure

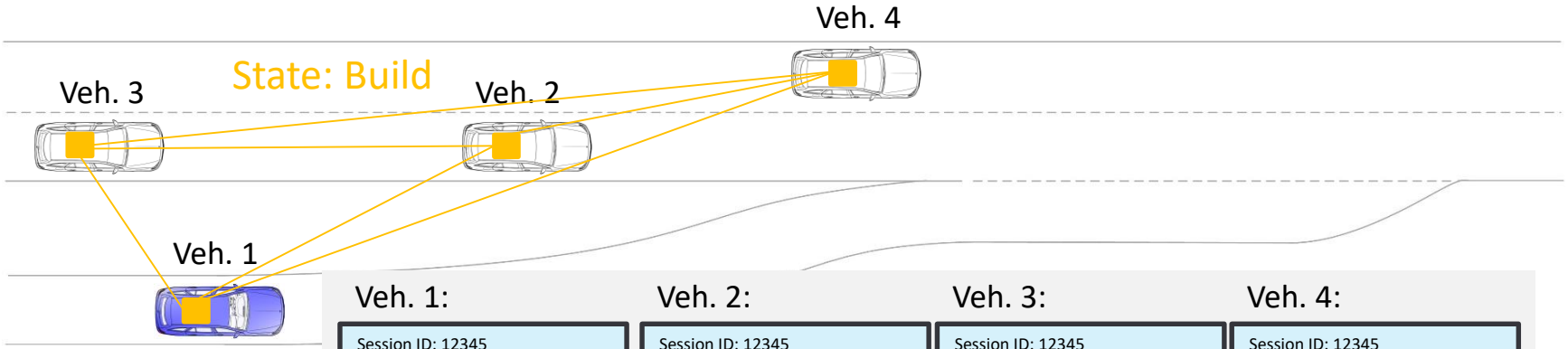

Veh. 1:

Session ID: 12345
FunctionCode: 1

Distributed state
{
State: Build
Roles:
<Veh1,lead;Veh2,front_1;Veh3,rear_1;Veh4,participant>
}

Desired state
{
State: Drive
}

Veh. 2:

Session ID: 12345
FunctionCode: 1

Distributed state
{
State: Build
Roles:
<Veh1,lead;Veh2,front_1;Veh3,rear_1;Veh4,participant>
}

Desired state
{
}

Veh. 3:

Session ID: 12345
FunctionCode: 1

Distributed state
{
State: Build
Roles:
<Veh1,lead;Veh2,front_1;Veh3,rear_1;Veh4,participant>
}

Desired state
{
}

Veh. 4:

Session ID: 12345
FunctionCode: 1

Distributed state
{
State: Build
Roles:
<Veh1,lead;Veh2,front_1;Veh3,rear_1;Veh4,participant>
}

Desired state
{
}

Common status change as soon as all participants have the same wish

F1 Collaborative Maneuver Protocol (CMP)

Procedure

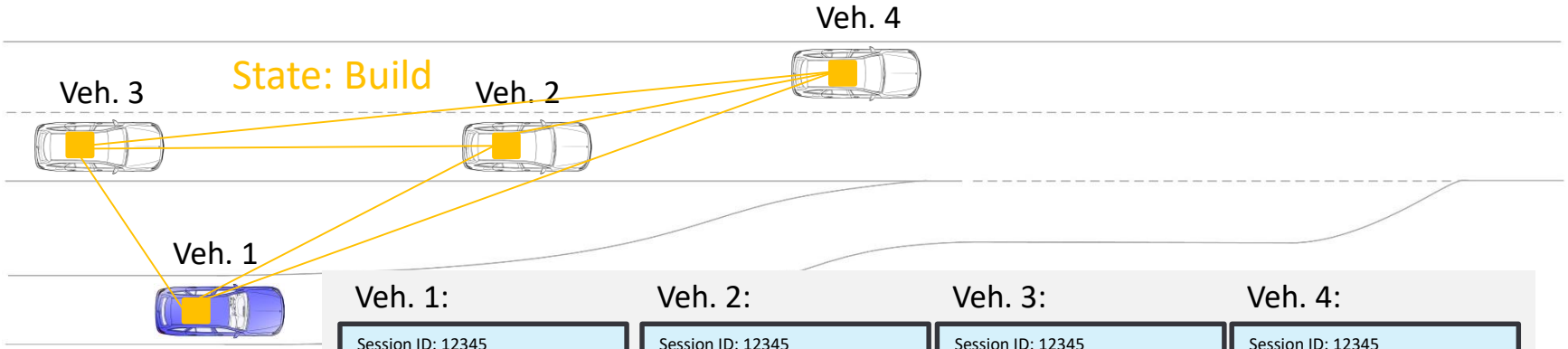

Veh. 1:

Session ID: 12345
FunctionCode: 1

Distributed state
{
State: Build
Roles:
<Veh1,lead;Veh2,front_1;Veh3,rear_1;Veh4,participant>
}

Desired state
{
State: Drive
}

Veh. 2:

Session ID: 12345
FunctionCode: 1

Distributed state
{
State: Build
Roles:
<Veh1,lead;Veh2,front_1;Veh3,rear_1;Veh4,participant>
}

Desired state
{
State: Drive
}

Veh. 3:

Session ID: 12345
FunctionCode: 1

Distributed state
{
State: Build
Roles:
<Veh1,lead;Veh2,front_1;Veh3,rear_1;Veh4,participant>
}

Desired state
{
State: Drive
}

Veh. 4:

Session ID: 12345
FunctionCode: 1

Distributed state
{
State: Build
Roles:
<Veh1,lead;Veh2,front_1;Veh3,rear_1;Veh4,participant>
}

Desired state
{
State: Drive
}

Common status change as soon as all participants have the same wish

F1 Collaborative Maneuver Protocol (CMP)

Procedure

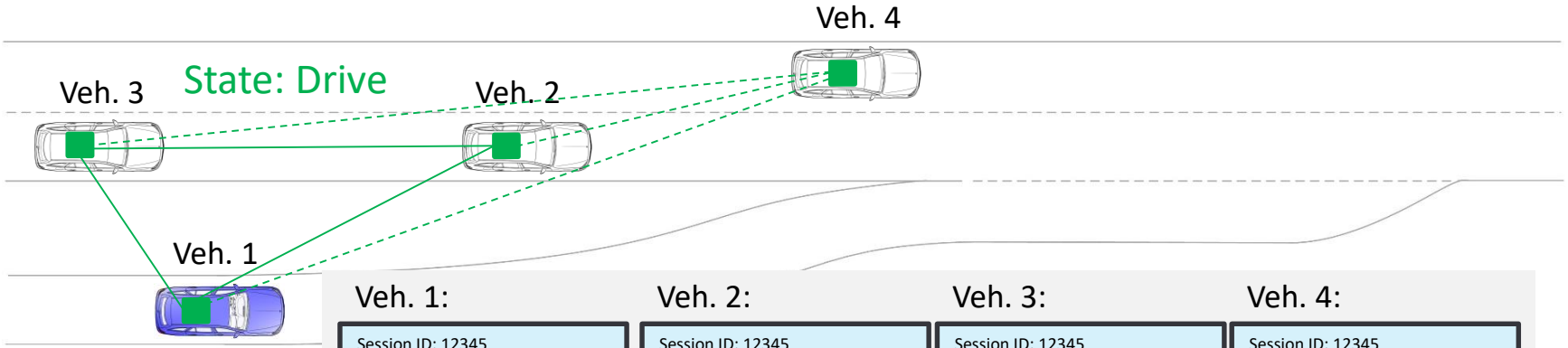

Send and Check Heartbeat

Veh. 1:

Session ID: 12345
FunctionCode: 1

Distributed state
{
State: Drive
Roles:
<Veh1,lead;Veh2,front_1;Veh3,rear_1;Veh4,participant>
}

Desired state
{
}

Veh. 2:

Session ID: 12345
FunctionCode: 1

Distributed state
{
State: Drive
Roles:
<Veh1,lead;Veh2,front_1;Veh3,rear_1;Veh4,participant>
}

Desired state
{
}

Veh. 3:

Session ID: 12345
FunctionCode: 1

Distributed state
{
State: Drive
Roles:
<Veh1,lead;Veh2,front_1;Veh3,rear_1;Veh4,participant>
}

Desired state
{
}

Veh. 4:

Session ID: 12345
FunctionCode: 1

Distributed state
{
State: Drive
Roles:
<Veh1,lead;Veh2,front_1;Veh3,rear_1;Veh4,participant>
}

Desired state
{
}

F1 Cooperative Maneuver Coordination – Merging

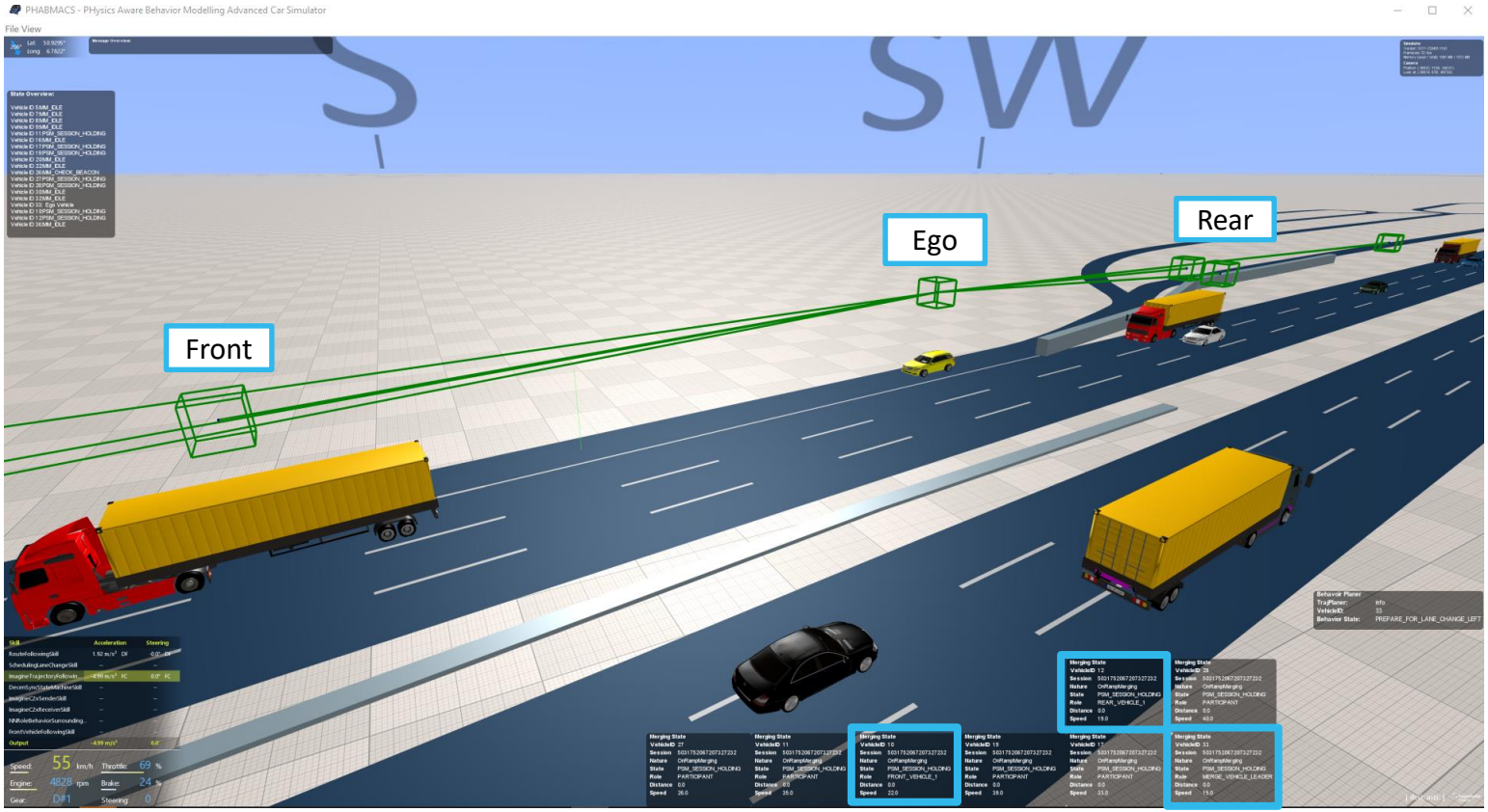

F1 Cooperative Maneuver Coordination – Merging

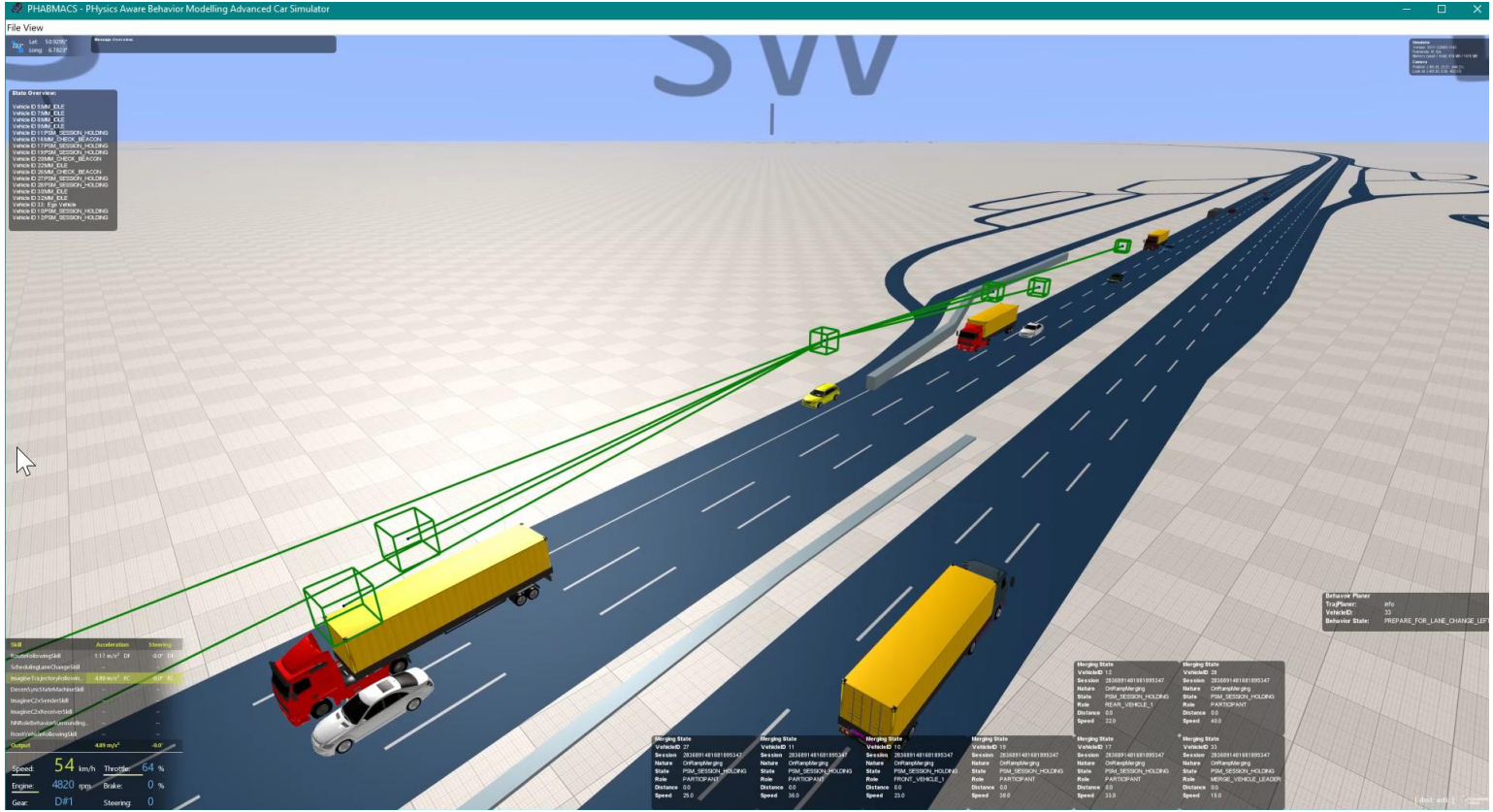

Legende:

- Initial
- Buildup
- Drive
- Disband
- Leave
- Join
- End

Role-Based Approach
Characteristics

- Session can take place over a long period of time
- States and roles are synchronized between vehicles
- The behavior results from the role, sate and function

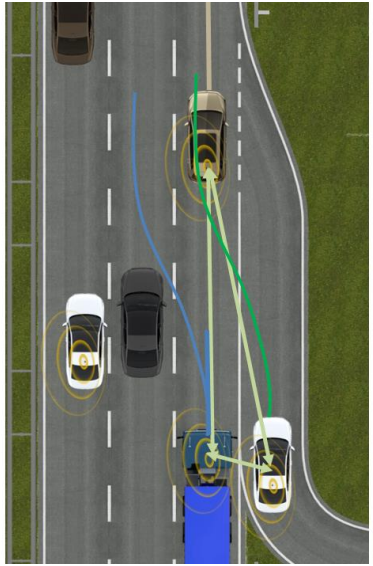

Session roles:
- Merge Veh.
- Front Veh.
- Rear Veh.

F2 Cooperative Maneuver Coordination - Platooning

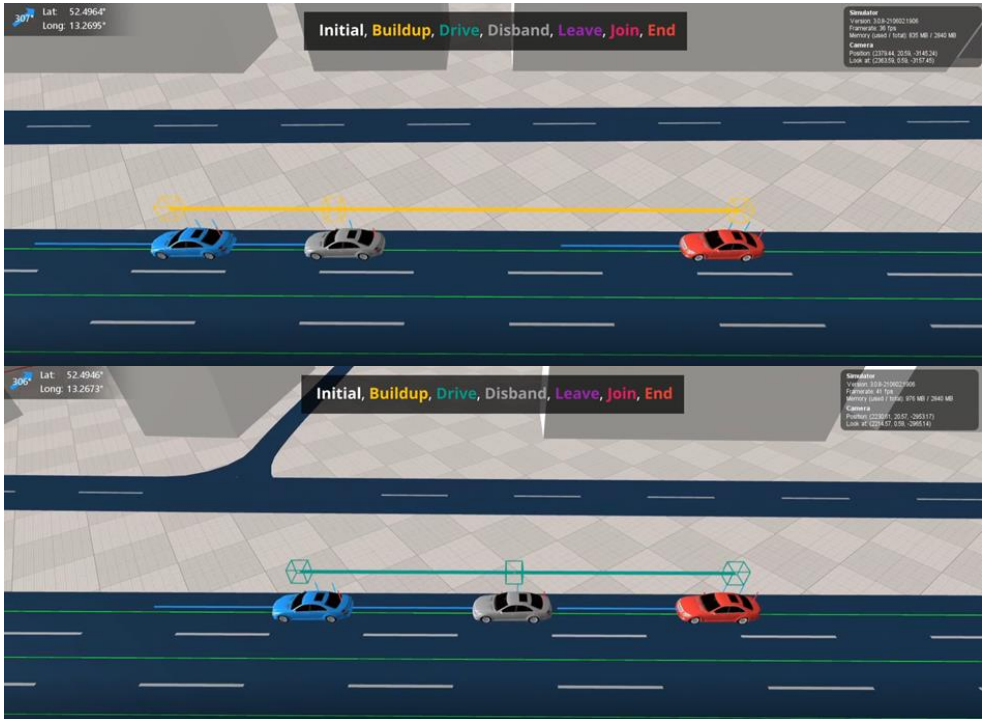

Legende:

- Initial
- Buildup
- Drive
- Disband
- Leave
- Join
- End

F2 Cooperative Maneuver Coordination - Platooning

Legende:

- Initial
- Buildup
- Drive
- Disband
- Leave
- Join
- End

Summary

- The functions F1 and F2 could be developed, implemented, presented and evaluated in simulations together with the role-based maneuver coordination concept
- The simulation studies* include
  - the pure scenario simulation
  - the integration of real data sets
  - the realization of the interaction between simulated vehicles and the vehicles from the real data sets

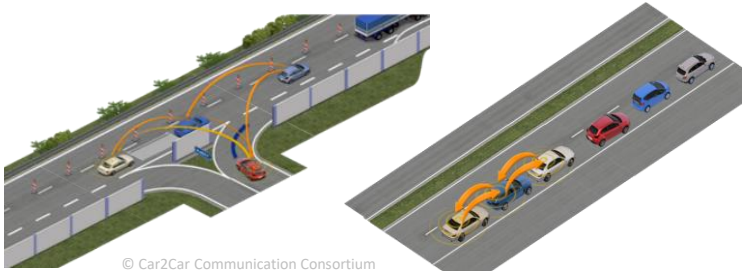

PHABMACS

highD, exID

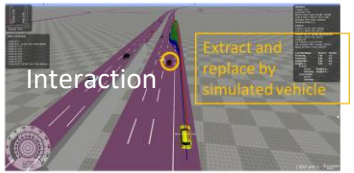

Interaction

* See Session: Simulation

THANK YOU

Dr. Gabi Breuel, Lucas Dahlbock, Dr. Ilja Radusch

Mercedes-Benz AG in Cooperation with DCAITI

Mercedes-Benz

[ˌdiːsɪ arˈtiː]

www.imagine-online.de

Supported by:

Federal Ministry for Economic Affairs and Climate Action

on the basis of a decision by the German Bundestag